SAMSUNG CONFIDENTIAL
THIS DOCUMENT CONTAINS CONFIDENTIAL
PROPRIETARY INFORMATION THAT IS
SAMSUNG ELECTRONICS CO'S PROPERTY.
DO NOT DISCLOSE TO OR DUPLICATE FOR OTHERS
EXCEPT AS AUTHORIZED BY SAMSUNG.

SM-A236B REV0.4A

SM-A236B/E/M/A2360
Common

2022.06.09

Sheet01 : GSM / WCDMA / LTE / NR RF
Sheet02 : TRANSCEIVER, SUB ANT
Sheet03 : CONNECTIVITY(BT/WIFI/FM), NFC
Sheet04 : AP(SM6375)
Sheet05 : AP(POWER), MEM(uMCP)
Sheet06 : PMIC(PM6375,PMR735A), IF PMIC
Sheet07 : AUDIO Codec, SENSOR, SIM, SD
Sheet08 : CAMERA
Sheet09 : DISPLAY PMIC, C2C

Engineer:	
Drawn by:	
R&D CHK:	TITLE: A23_5G_NA
DOC CTRL CHK:	Size:
MFG ENGR CHK:	
QA CHK:	REV:
Drawing Number:	Page: 0

Changed by: user31 | Date Changed: | Time Changed:

SAMSUNG CONFIDENTIAL
THIS DOCUMENT CONTAINS CONFIDENTIAL
AND PROPRIETARY INFORMATION OF
SAMSUNG ELECTRONICS CO. LTD. PROPERTY.
DO NOT DISCLOSE TO OR DUPLICATE FOR OTHERS
EXCEPT AS AUTHORIZED BY SAMSUNG.

2G	850/ 900/ 1800 / 1900	MIMO(4x4) 4G	B1/ 3/ 4/ 7/ 38/ 41/ 66
3G	W1/ 2/ 4/ 5/ 8	MIMO(4x4) NR	n1/ 3/ 7/ 38/ 41/ 66/ 77/ 78/ 79
FDD	B1 / 2/ 3/ 4/ 5/ 7/ 8/ 12/ 13/ 17/ 20/ 26/ 28/ 66	SRS	1T4R, n41/ 78/ 79
TDD	B38/ 40/ 41	UL CA	3C, 7C, 38C, 40C
NR	n1/ 3/ 5/ 7/ 8/ 20/ 28/ 38/ 40/ 41/ 66/ 77/ 78/ 79	HPUE	not support

MAIN ANT1
LB TRX

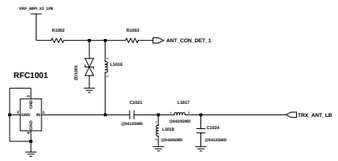

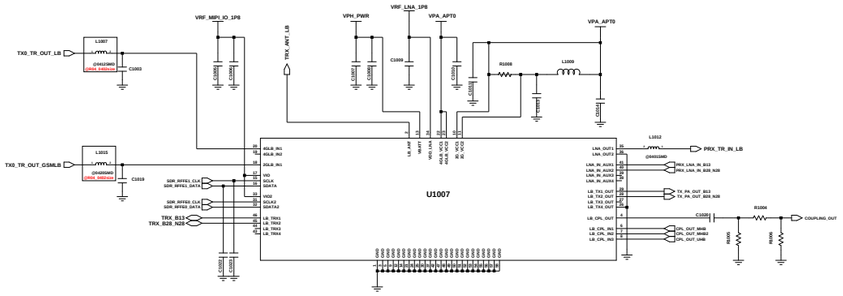

LB L-PAMiD

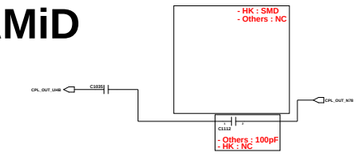

B13

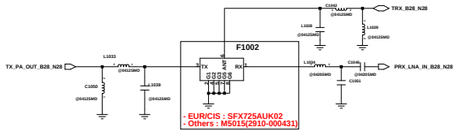

B28/B20 Rx

MAIN ANT2
MHB TRX, N78/N79 DRX

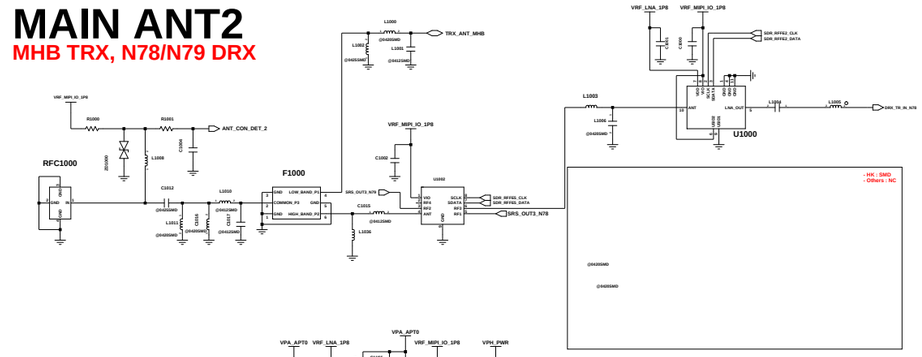

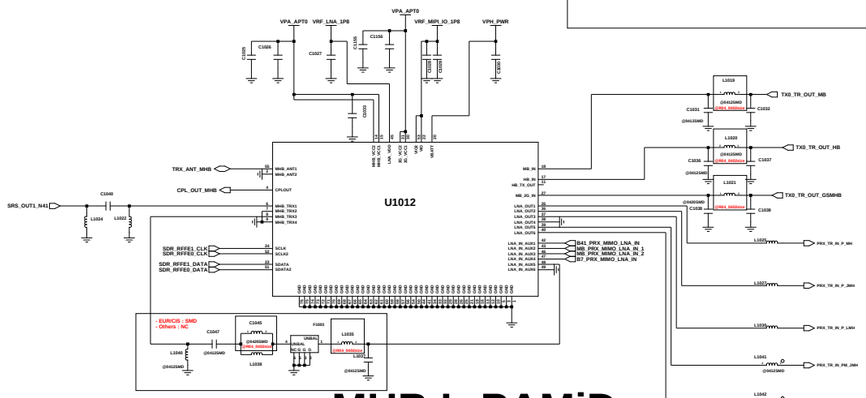

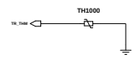

THERMISTER

MHB L-PAMiD

SUB ANT1
LMHB DRX

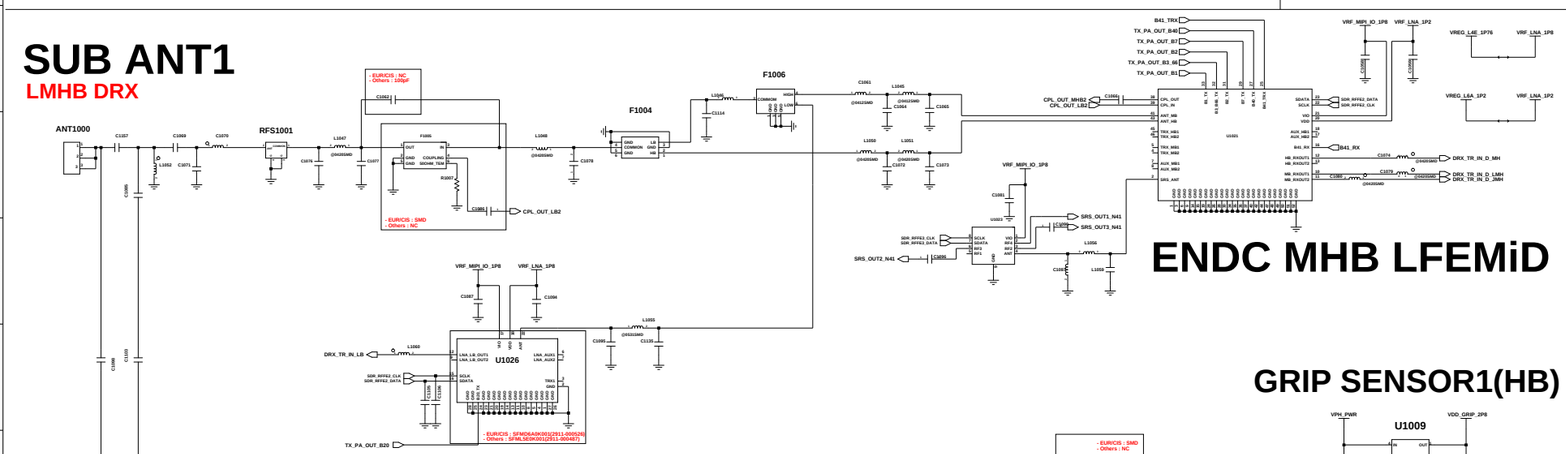

LB LFEMiD

ENDC MHB LFEMiD

GRIP SENSOR1(HB)

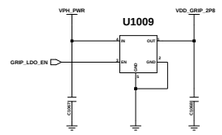

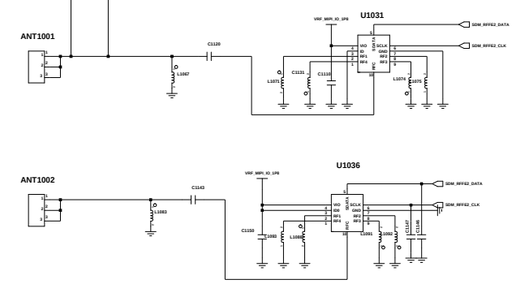

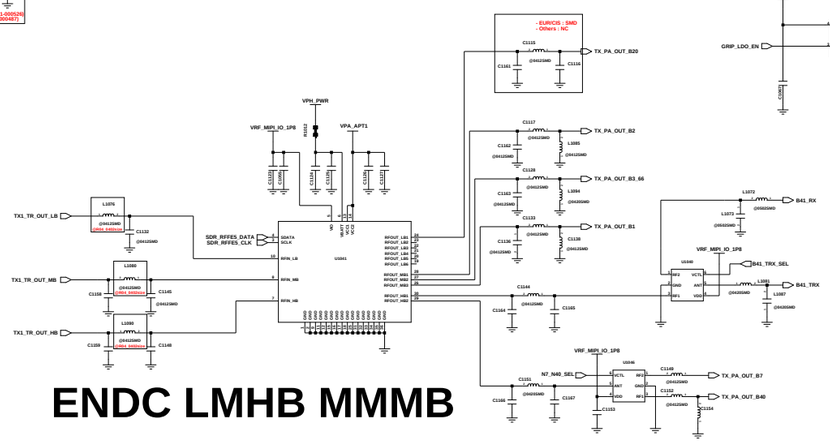

ENDC LMHB MMMB

SUB ANT3
N78/N79 TRX

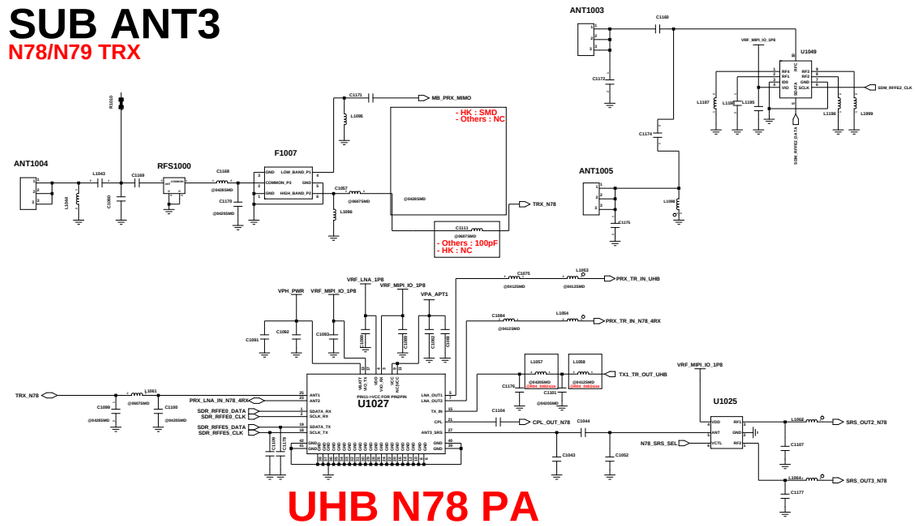

UHB N78 PA

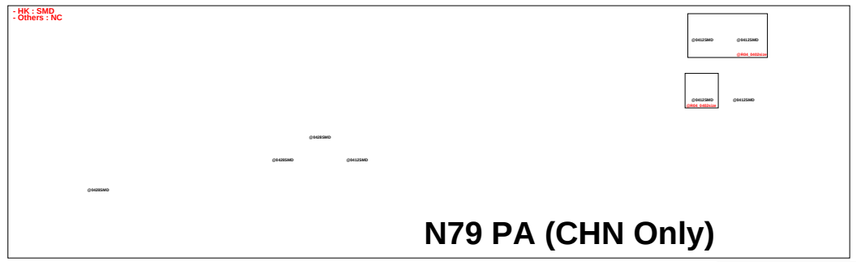

N79 PA (CHN Only)

Engineer:	A23_5G_Global
Drawn by:	
R&D Code:	TITLE: RF PAM/FEM
DOC Code:	
MFG Code:	

Changed by:	Date Changed:	Time Changed:	QA Code:	REV:	Drawing Number:

SAMSUNG CONFIDENTIAL
THIS DOCUMENT CONTAINS CONFIDENTIAL
AND PROPRIETARY INFORMATION OF
SAMSUNG ELECTRONICS. THIS PROPERTY
DO NOT DISCLOSE TO OR DUPLICATE FOR OTHERS
EXCEPT AS AUTHORIZED BY SAMSUNG.

TRANSCEIVER(SDR735)

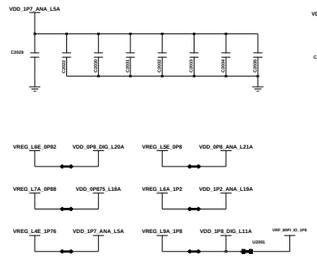

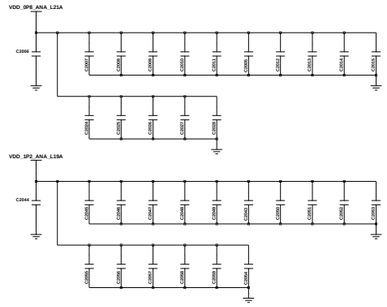

Coupling SW

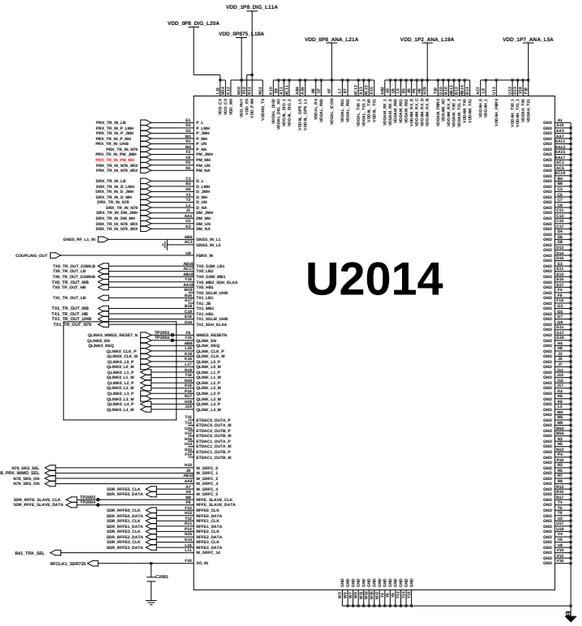

LTE	NR	LTE PA	NR PA
LB	LB	ENDC MMMB	LB L-PAMiD
LB	MB	LB L-PAMiD	ENDC MMMB
LB	HB	LB L-PAMiD	ENDC MMMB
LB	UHB	LB L-PAMiD	UHB PA

APT0

LB LPAMID / OMH LPAMID

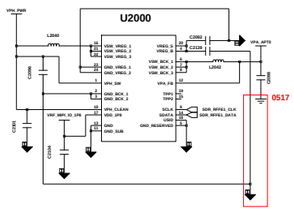

LTE	NR	LTE PA	NR PA
MB	LB	ENDC MMMB	LB L-PAMiD
MB	MB	OMH L-PAMiD	ENDC MMMB
MB	HB	OMH L-PAMiD	ENDC MMMB
MB	UHB	OMH L-PAMiD	UHB PA

APT1

ENDC MMMB / UHB LPAMIF

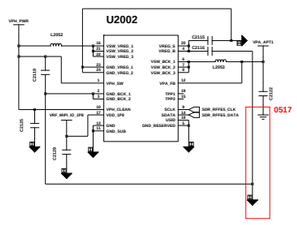

SUB ANT2

MB DRX MIMO, N78 PRX MIMO
GPS, WIFI

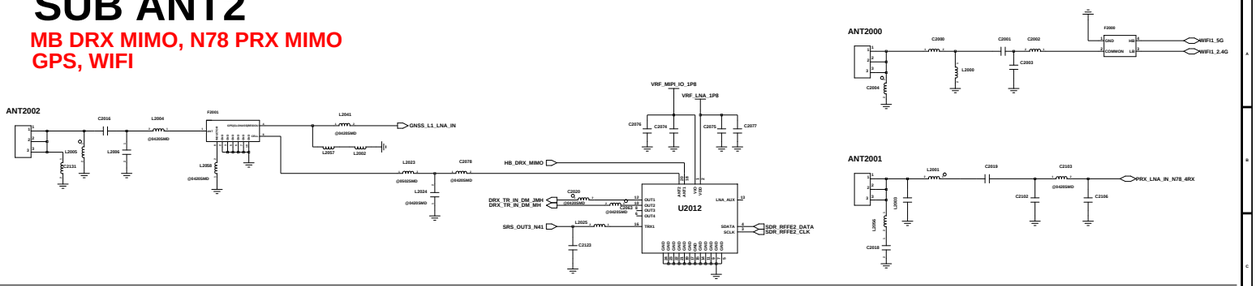

SUB ANT3

MB PRX MIMO

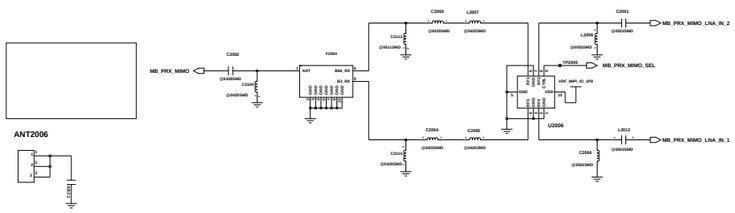

SUB ANT4

HB PRX MIMO
N79 PRX MIMO

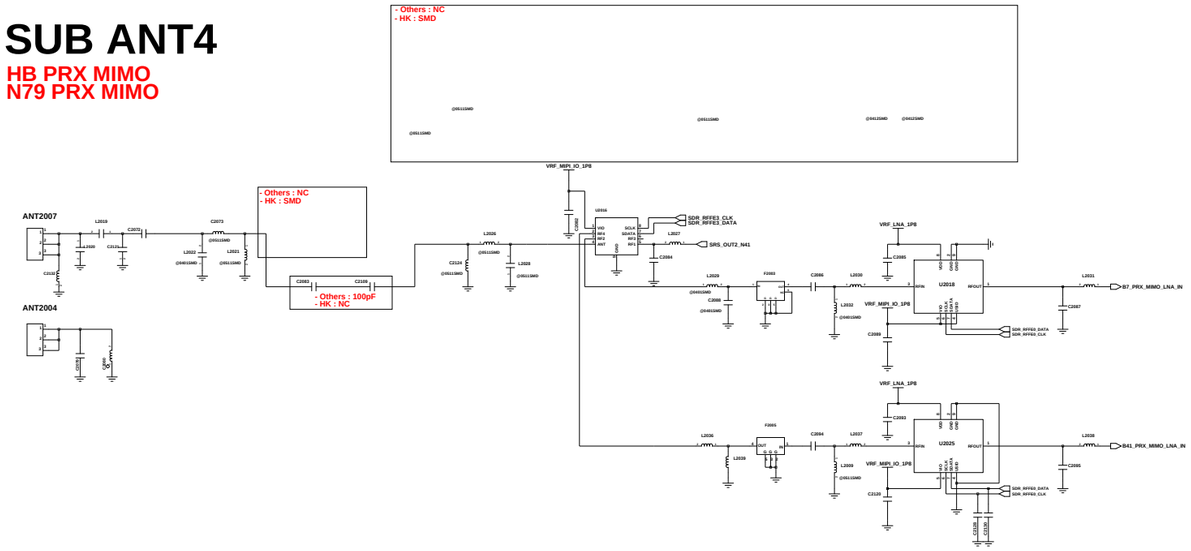

SUB ANT5

HB DRX MIMO
N78/N79 DRX MIMO

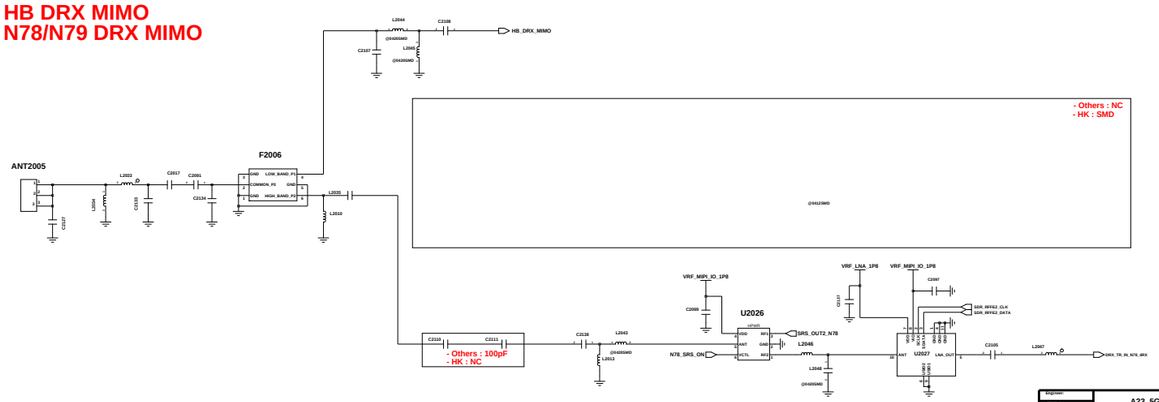

Engineer:	A23_5G_Global
PHONE NO:	
INSPECTOR:	TITLE: RF TRCV/PAM/APT
DATE:	
MFG DATE:	

Changed by: | Date Changed: | Time Changed: | QA Date: | REV: | Drawing Number:

SAMSUNG CONFIDENTIAL
THIS DOCUMENT CONTAINS CONFIDENTIAL
PROPRIETARY INFORMATION THAT IS
SAMSUNG ELECTRONICS CO'S PROPERTY.
DO NOT DISCLOSE TO OR DUPLICATE FOR OTHERS
EXCEPT AS AUTHORIZED BY SAMSUNG.

WIFI/BT/FM

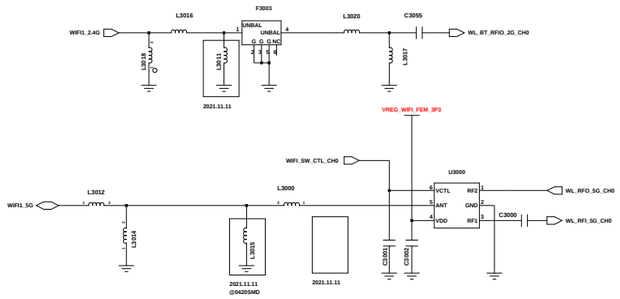

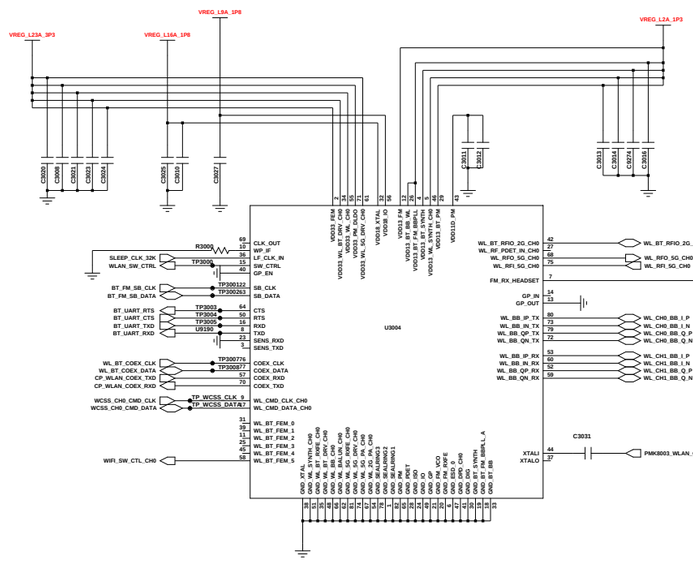

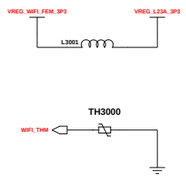

GPS L1 / GNSS/BEIDOU

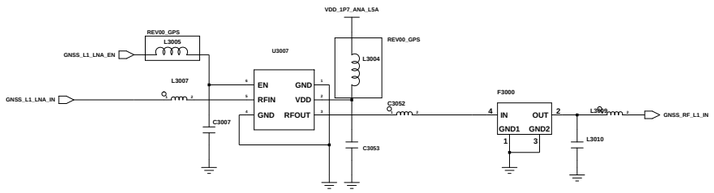

GND CCP

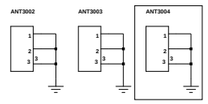

LCD SMR gasket

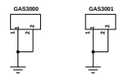

NFC

NFC	NFC PART	Power supply of SIM1		NFC_CHECK:GPIO99	
	U3026	U7011	U7012	R4022	R4025
NFC	CONNECT	0ohm	open	10K ohm	open
nonNFC	NC	open	0ohm	open	10K ohm

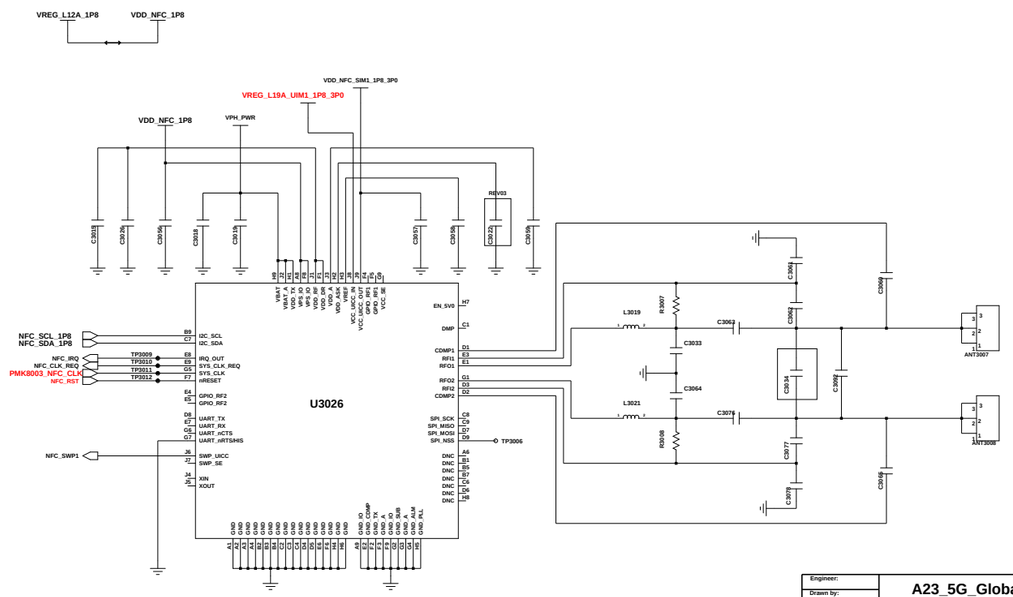

Engineer:	A23_5G_Global		
Drawn by:			
R&D CHK:	TITLE:	Size:	
DOC CTRL CHK:	WIFI/NFC/GPS		
MFG ENGR CHK:			

Changed by:	Date Changed:	Time Changed:	QA CHK:	REV	Drawing Number:	Page:
user118						1

SAMSUNG CONFIDENTIAL
THIS DOCUMENT CONTAINS CONFIDENTIAL
PROPRIETARY INFORMATION THAT IS
SAMSUNG ELECTRONICS CO'S PROPERTY.
DO NOT DISCLOSE TO OR DUPLICATE FOR OTHERS
EXCEPT AS AUTHORIZED BY SAMSUNG.

SM6375

(INTERFACE, GPIO)

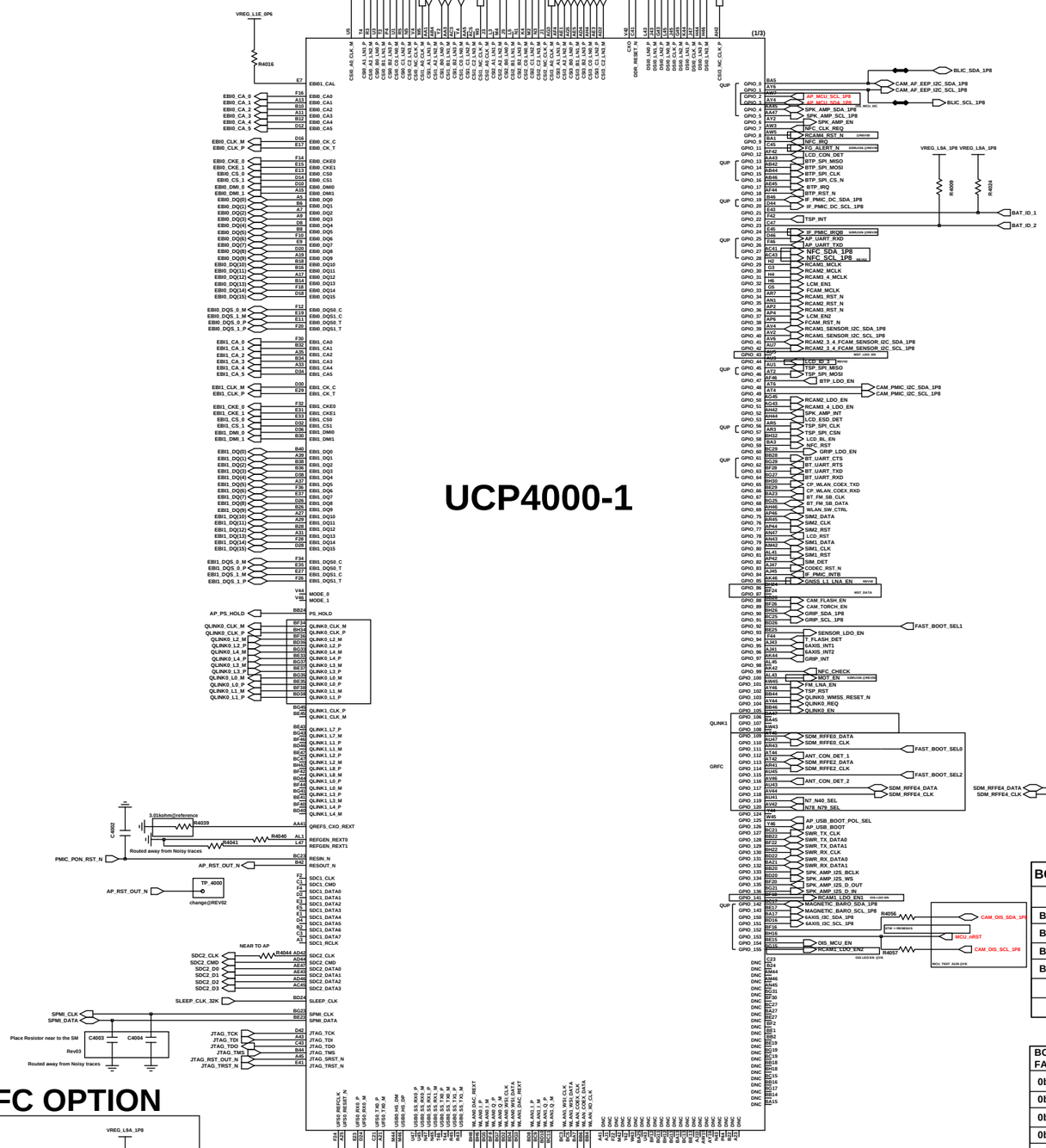

I2C PULL UP

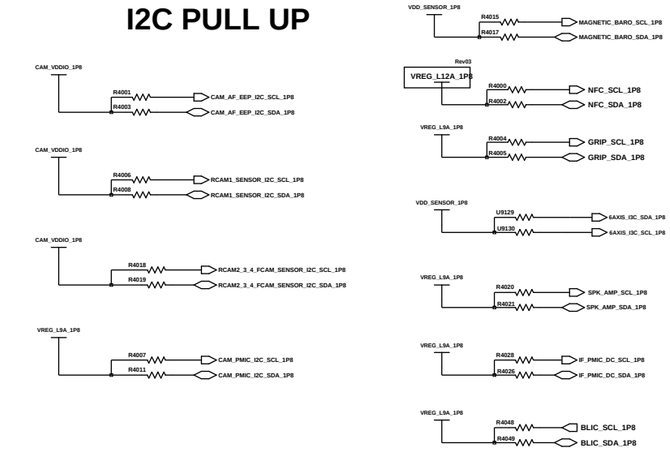

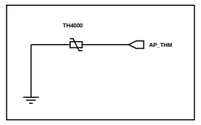

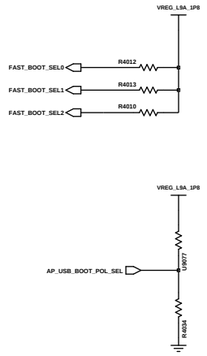

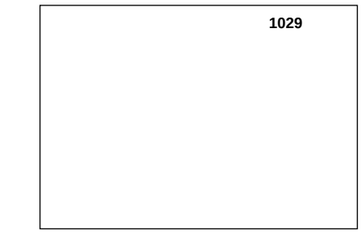

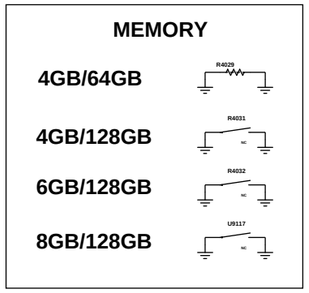

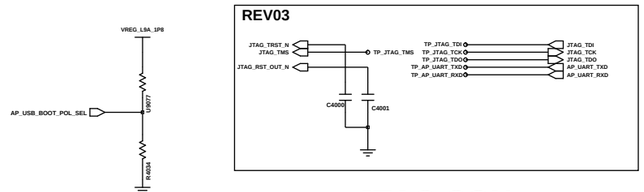

JTAG CON

BOOT CONFIG GPIOs	FUNCTIONALITY
GPIO126	FORCED_USB_BOOT
BOOT_GONFIG[0]: GPIO_109	WDOG_DISABLE
BOOT_GONFIG[1]: GPIO_111	FASTBOOT_SEL[0]
BOOT_GONFIG[2]: GPIO_92	FASTBOOT_SEL[1]
BOOT_GONFIG[3]: GPIO_115	FASTBOOT_SEL[2]
GPIO125	FORCED_USB_BOOT_POL_SEL

BOOT_CONFIG[3:1] FASTBOOT_SEL[2:0]	BOOT OPTIONS
0b000	UFS HS->SD->eDL(eDL path-USB only)
0b001	SD->UFS HS->eDL(eDL path-USB only)
0b010	USB->eDL(eDL path-USB only)
0b011	eMMC->SD->eDL(eDL path-USB only)
0b100	SD->eMMC->eDL(eDL path-USB only)
0b101	UFS HS->eDL(eDL path-USB only)
0b110	UFS HS->SD->eDL(eDL path-USB only)
0b111	eMMC->eDL(eDL path-USB only)

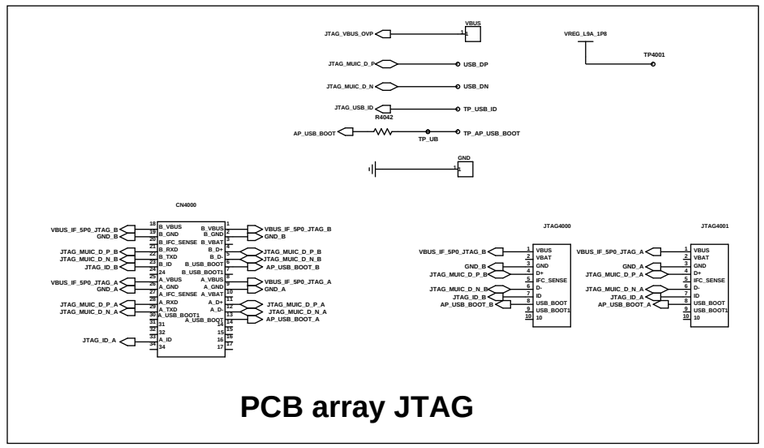

Engineer	A23_5G_Global
Drawn by:	
R&D CHK:	TITLE: AP/CP
DOC CTRL CHK:	
MFG ENGR CHK:	
QA CHK:	Drawing Number

Changed by: | Date Changed: | Time Changed:

SAMSUNG CONFIDENTIAL
THIS DOCUMENT CONTAINS CONFIDENTIAL PROPRIETARY INFORMATION THAT IS SAMSUNG ELECTRONICS CO'S PROPERTY. DO NOT DISCLOSE TO OR DUPLICATE FOR OTHERS EXCEPT AS AUTHORIZED BY SAMSUNG.

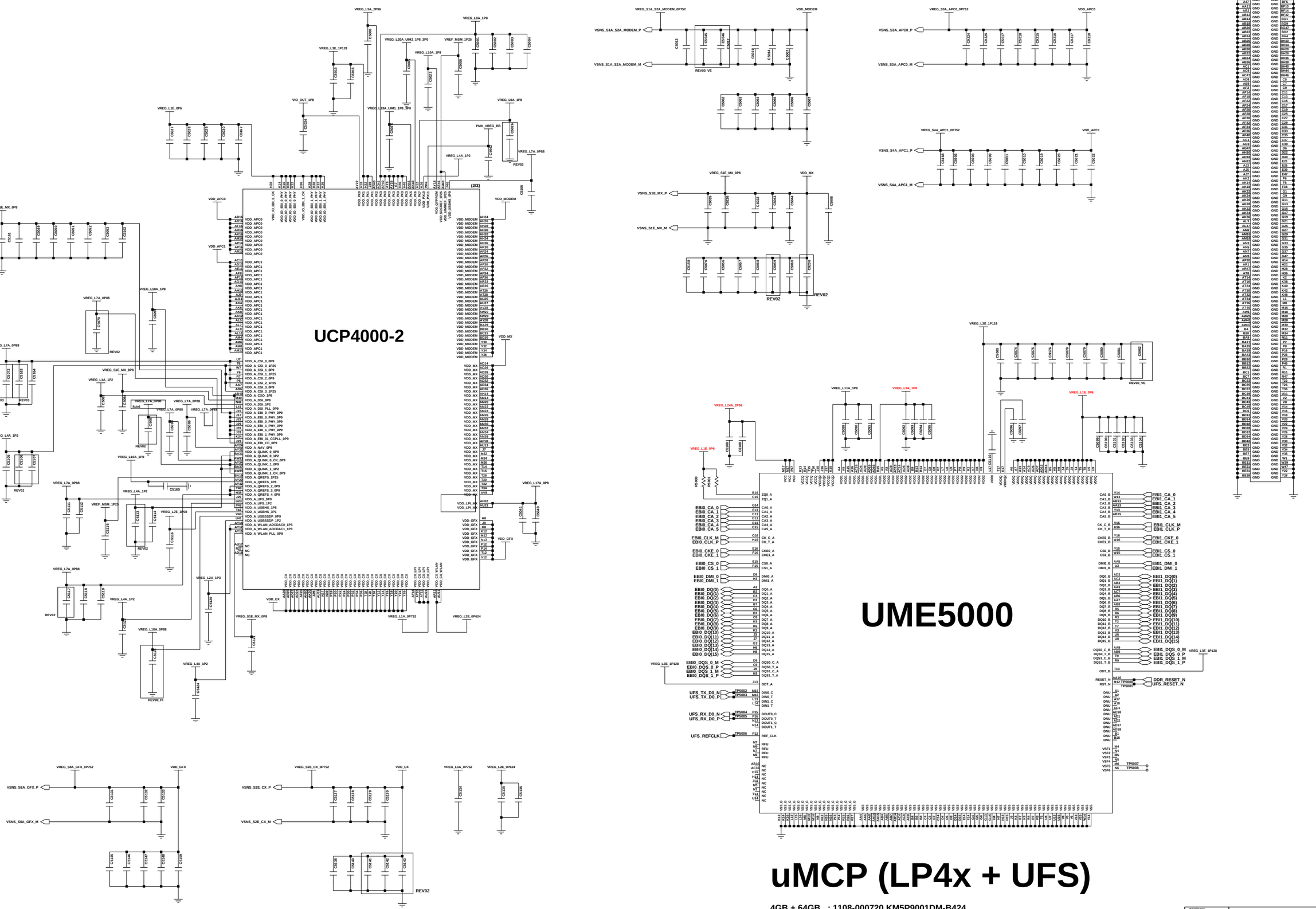

uMCP (LP4x + UFS)

4GB + 64GB : 1108-000720 KM5P9001DM-B424
4GB + 128GB : 1108-000713 KM5L9001DM-B424
6GB + 128GB : 1108-000714 KM2L9001CM-B518

Engineer:	A23_5G_Global
Drawn by:	
R&D CHK:	TITLE: AP/CP/uMCP
DOC CTRL CHK:	
MFG ENGR CHK:	

Changed by: | Date Changed: | Time Changed: | QA CHK: | REV | Drawing Number: | Page:

SAMSUNG CONFIDENTIAL
THIS DOCUMENT CONTAINS CONFIDENTIAL
AND PROPRIETARY INFORMATION OF
SAMSUNG ELECTRONICS CO'S PROPERTY.
DO NOT DISCLOSE TO OR DUPLICATE FOR OTHERS
EXCEPT AS AUTHORIZED BY SAMSUNG.

PMIC (PM6375)

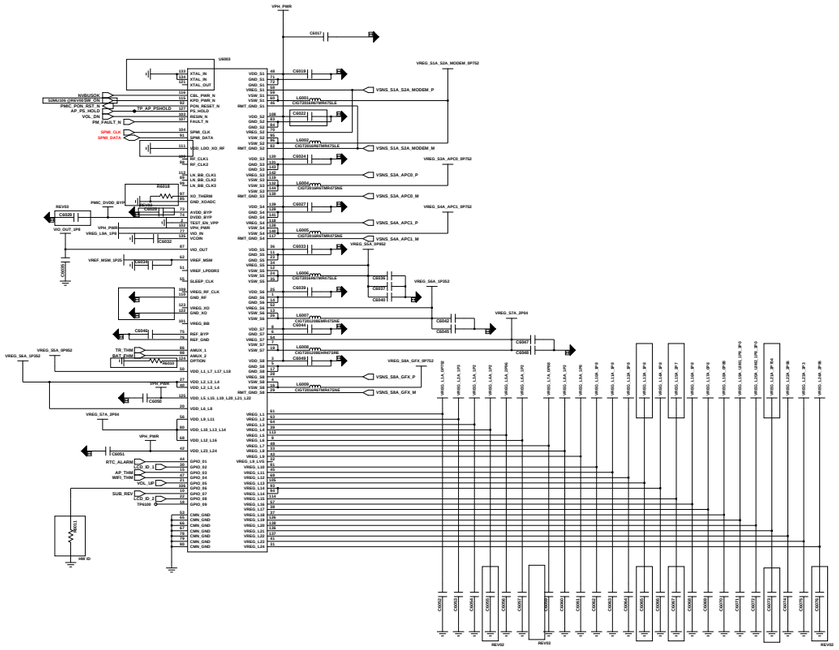

PMIC (PMR735A)

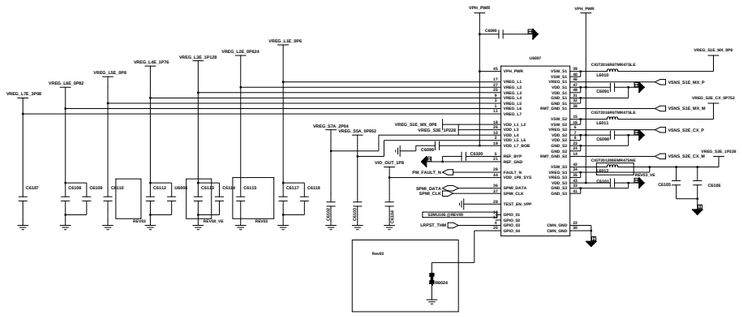

H/W ID TABLE (R6011)

HW ID	REV	VALUE	COMMENT
00	Bring-up	12K	
01	Rev00	20K	PRE_PV1
02	Rev01	30K	RF_TEST
03	Rev02	51K	PRE_PV2
04	Rev02A	68K	TEST
05	Rev02B	82K	PRE_PV2_VOIS
06	Rev03	100K	PV1
07	Rev03A	120K	PV1_ANT_SW
08	Rev04_04A	150K	PV2
09		200K	
10			

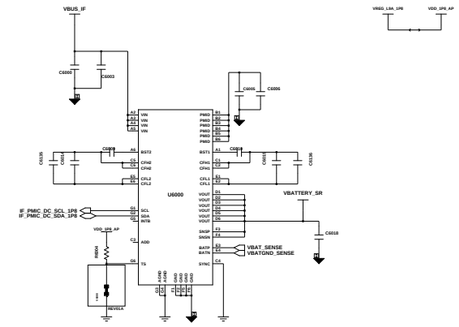

DIRECT CHARGER (HL7132)

COPY FROM SM-A33

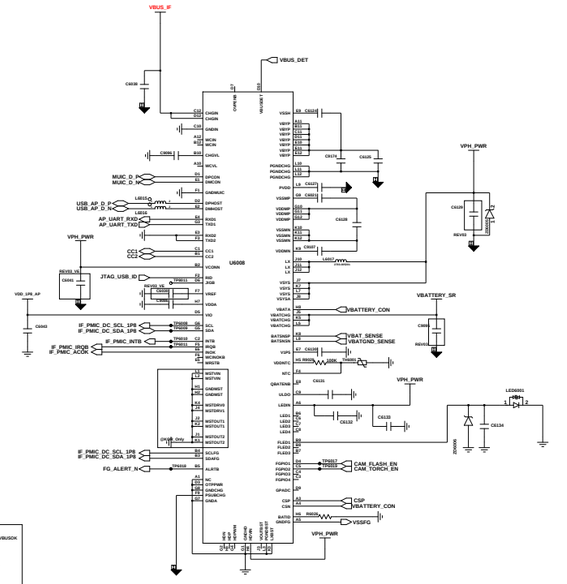

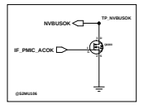

IF PMIC(S2MU106)

COPY FROM SM-A235F

OVP

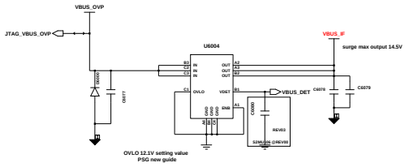

COPY FROM M53

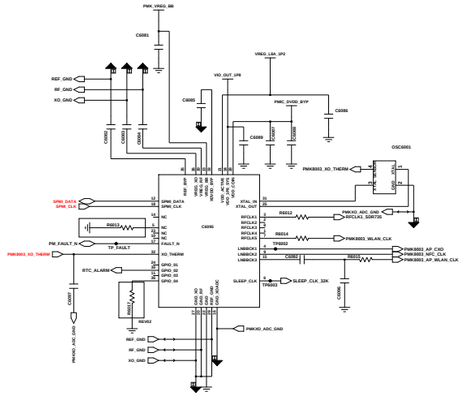

CLOCK GEN

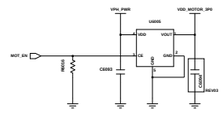

MOTOR

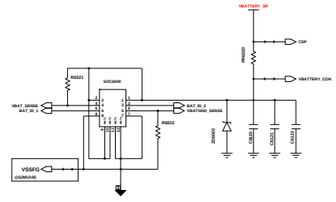

BATTERY CON

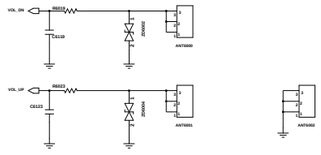

VOL KEY

Engineer:	A23_5G_Global
Drawn by:	
R&D CHK:	TITLE: POWER/MOT/KEY
DOC CTRL CHK:	SIZE:
MFG SIGN CHK:	
QA CHK:	REV: Drawing Number:

Changed by:	Date Changed:	Time Changed:

SAMSUNG CONFIDENTIAL
THIS DOCUMENT CONTAINS CONFIDENTIAL PROPRIETARY INFORMATION THAT IS SAMSUNG ELECTRONICS CO'S PROPERTY. DO NOT DISCLOSE TO OR DUPLICATE FOR OTHERS EXCEPT AS AUTHORIZED BY SAMSUNG.

AUDIO & SENSOR PART

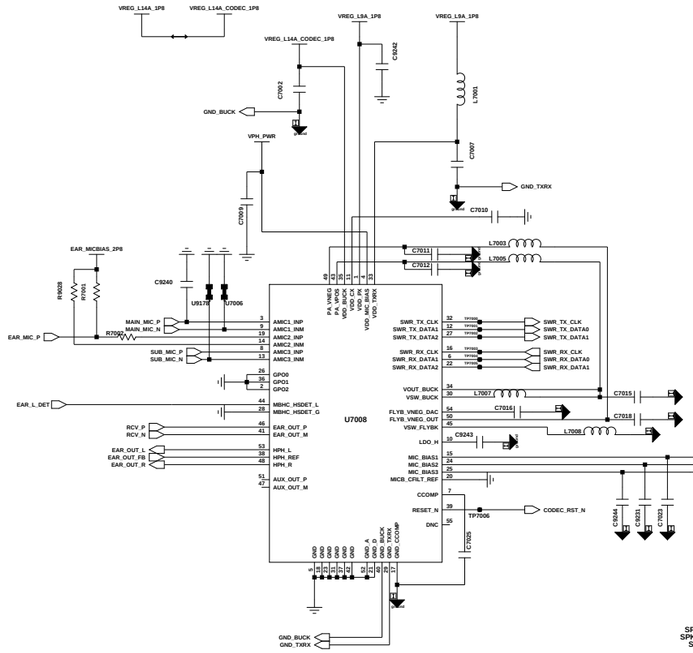

CODEC

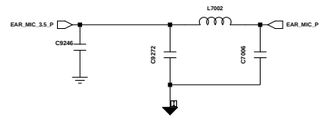

EAR MIC

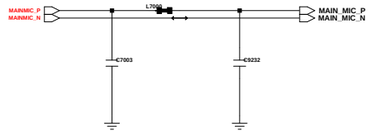

MAIN MIC

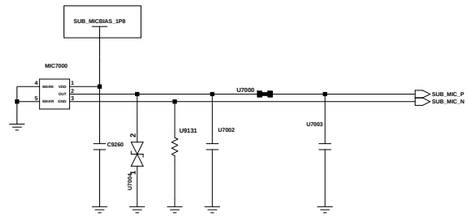

2nd MIC

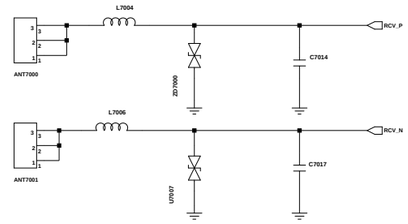

RCV CONTACT

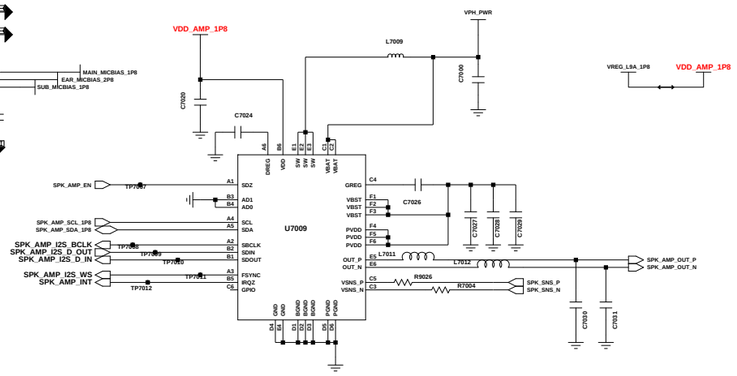

SPK AMP

SENSOR

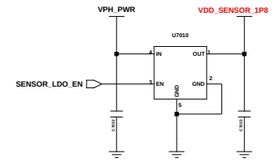

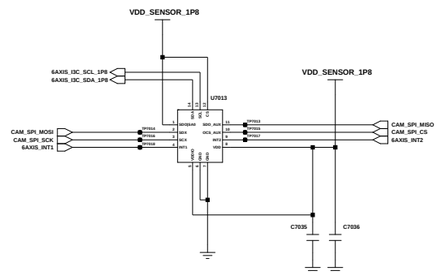

ACC&GYRO SENSOR

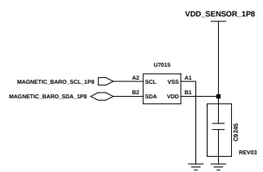

MAGNETIC SENSOR

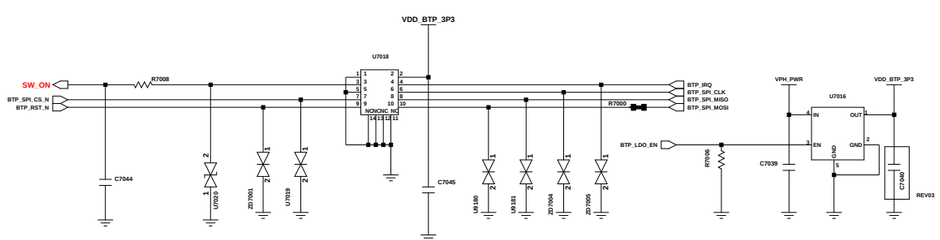

PWR & SIDE FPS

DUAL SIM / T-FLASH (3in3)

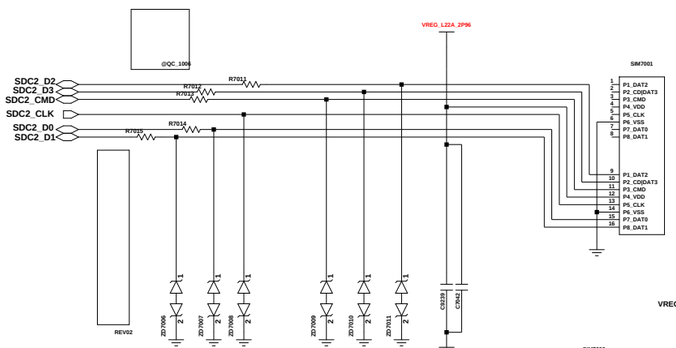

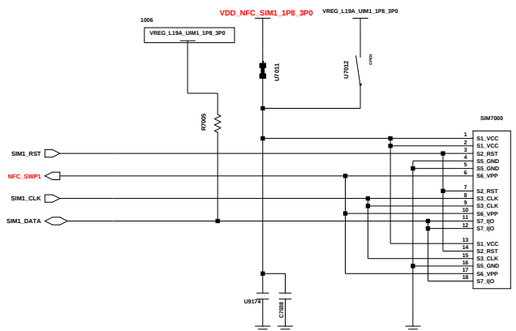

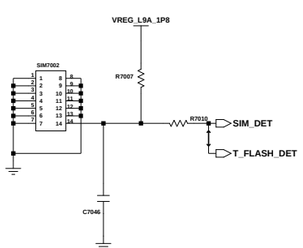

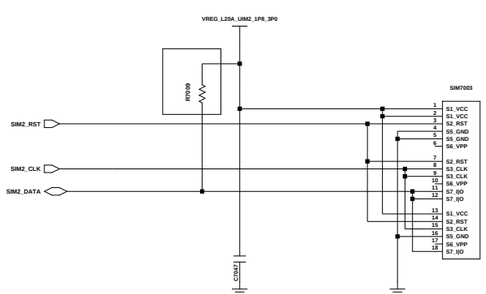

Engineer:			
Drawn by:			A23_5G_Global
R&D CHK:			TITLE: AUDIO/SIM&SD/SENSOR
DOC CTRL CHK:			
MFG ENGR CHK:			
Changed by:	Date Changed:	Time Changed:	QA CHK:

REV | Drawing Number: | Size: | Page:

SAMSUNG CONFIDENTIAL
THIS DOCUMENT CONTAINS CONFIDENTIAL PROPRIETARY INFORMATION THAT IS SAMSUNG ELECTRONICS CO'S PROPERTY. DO NOT DISCLOSE TO OR DUPLICATE FOR OTHERS EXCEPT AS AUTHORIZED BY SAMSUNG.

CAMERA

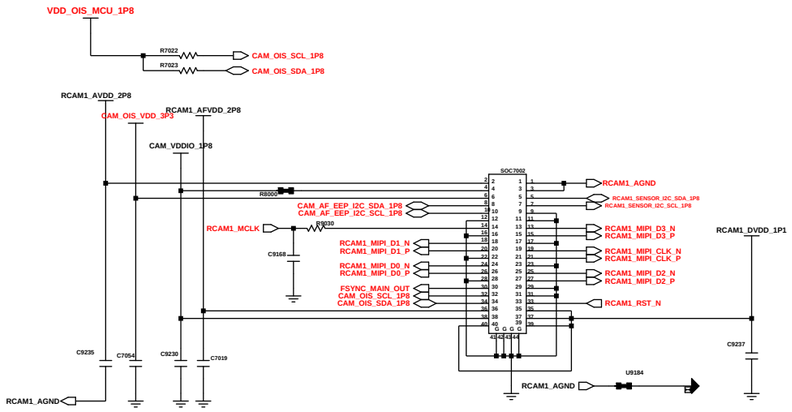

RCAM1_50M(OIS_40PIN)

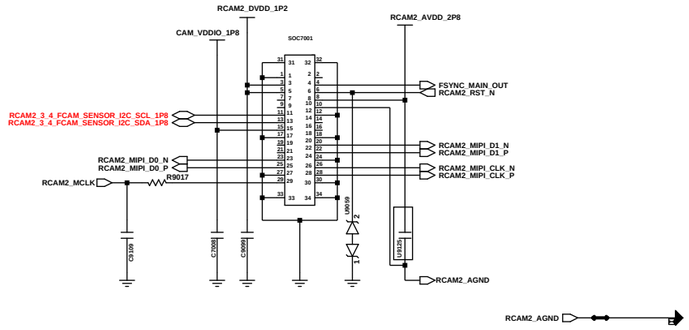

RCAM2_5M_UW (30pin)_GC5035

COPY FROM SM-A13_LTE

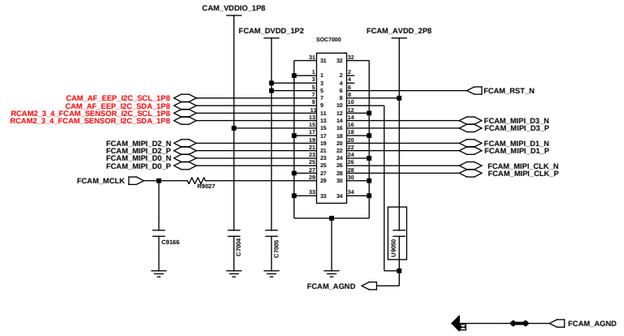

FRONT_8M FF (30PIN)_GC08A3

COPY FROM SM-A127F

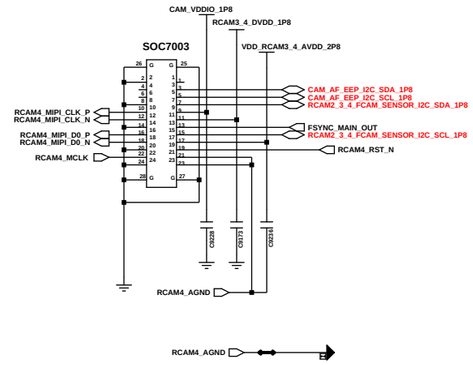

RCAM4_2M_MACRO (24PIN)_GC02M1

COPY FROM SM-A13_LTE

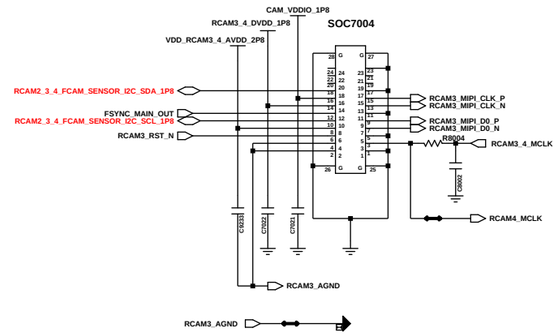

RCAM3_2M_BOKEH (24PIN)_GC02M1B

COPY FROM SM-A13_LTE

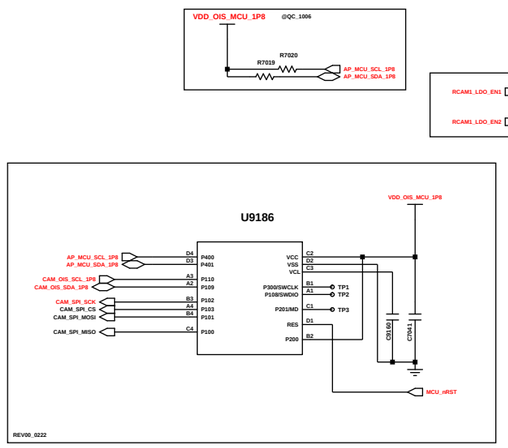

MCU(STM -> RENESAS)

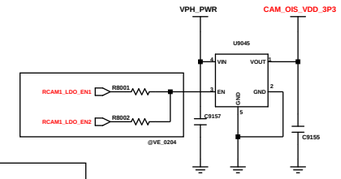

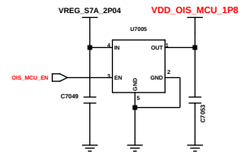

CAM PMIC

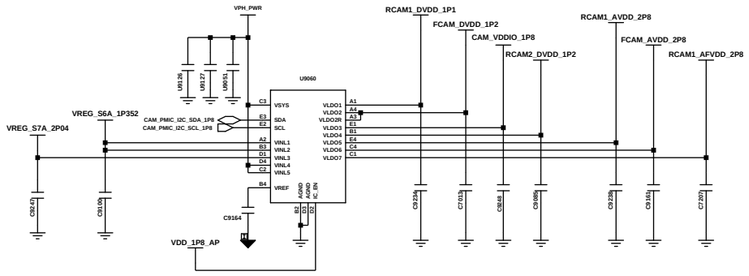

COPY FROM SM-A13_LTE

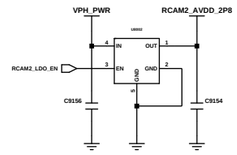

RCAM2_AVDD

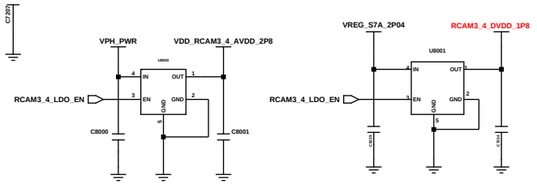

RCAM3_4_AVDD

Engineer:			A23_5G_Global
Drawn by:			
R&D CHK:			TITLE: CAMERA
DOC CTRL CHK:			
MFG ENGR CHK:			
QA CHK:	Changed by:	Date Changed:	Time Changed:
REV	Drawing Number:		Page: 7/8

SAMSUNG CONFIDENTIAL
THIS DOCUMENT CONTAINS CONFIDENTIAL
PROPRIETARY INFORMATION THAT IS
SAMSUNG ELECTRONICS CO'S PROPERTY.
DO NOT DISCLOSE TO OR DUPLICATE FOR OTHERS
EXCEPT AS AUTHORIZED BY SAMSUNG.

C2C (Conn to Conn FPCB)

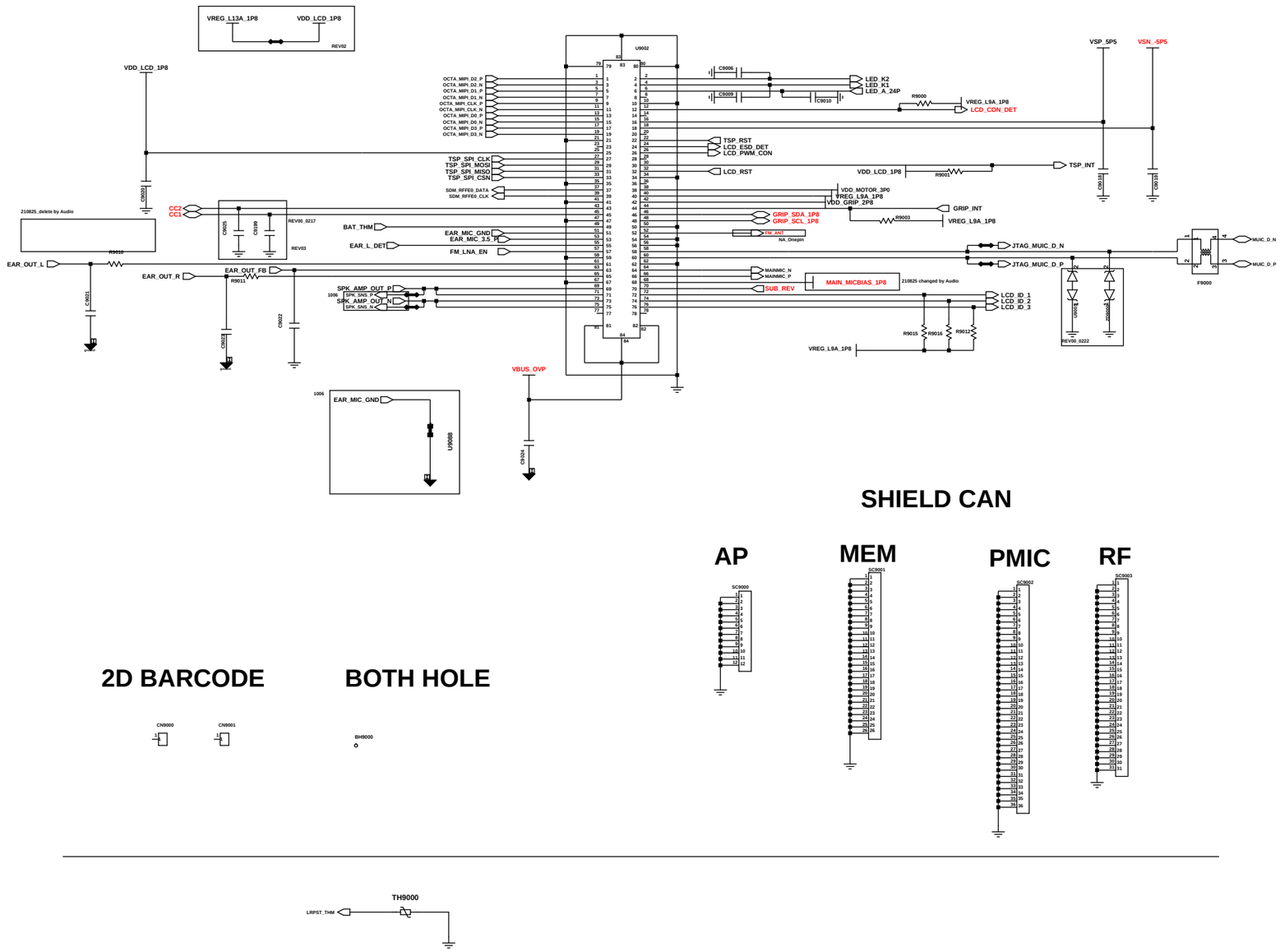

SHIELD CAN

AP

MEM

PMIC

RF

2D BARCODE

BOTH HOLE

DISPLAY

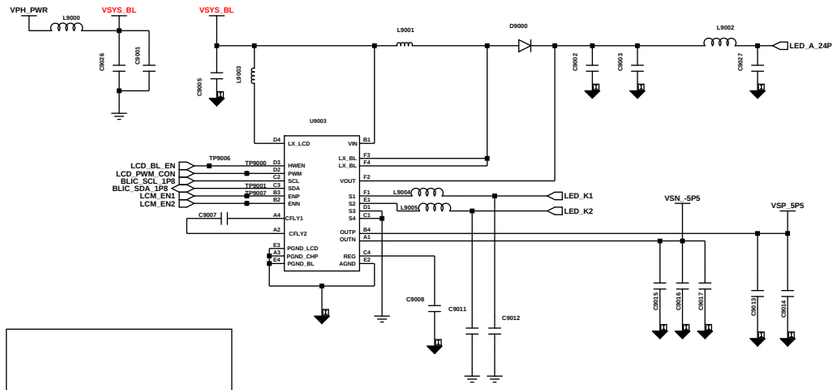

LCD_BL_IC
copy from A20e

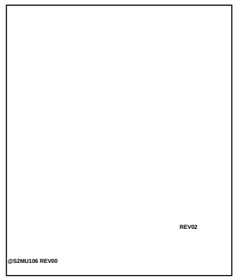

Engineer:	A23_5G_Global
Drawn by:	
R&D CHK:	TITLE: MAIN CON/OCTA DCDC
DOC CTRL CHK:	Size:
MFG ENGR CHK:	
QA CHK:	REV: Drawing Number: Page:

Changed by: user29 | Date Changed: Thursday, June 18, 2015 | Time Changed: 10:19:28 am

SAMSUNG CONFIDENTIAL
THIS DOCUMENT CONTAINS CONFIDENTIAL
AND PROPRIETARY INFORMATION OF
SAMSUNG ELECTRONICS CO'S PROPERTY.
DO NOT DISCLOSE TO OR DUPLICATE FOR OTHERS
EXCEPT AS AUTHORIZED BY SAMSUNG.

SM-A236B_SUB_REV05(Qorvo)

MAIN ANTENNA1 (LB)

MAIN ANTENNA1 (X-GND)

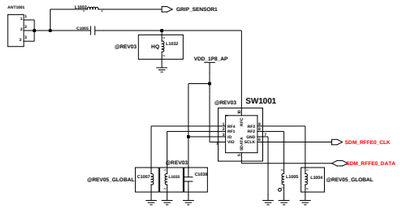

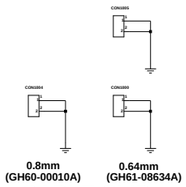

0.8mm (GH60-00010A) 0.64mm (GH61-08634A)

CABLE CLIP

MAIN ANTENNA2 (MB, HB)

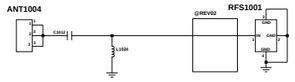

MAIN ANTENNA2 (X-GND)

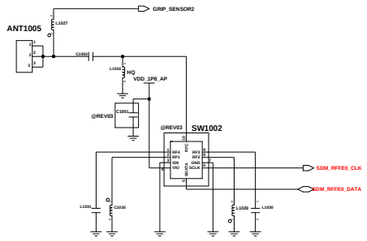

MAIN FPCB

Pin map : 1028

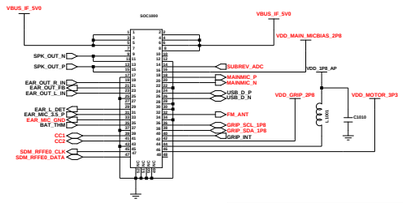

SUB Region

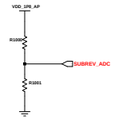

Region TABLE (R1001)

ID	Region	VALUE	COMMENT
1	GLOBAL	12K	PV2 ~
2	NA	1M	PV2 ~

BAT_THM

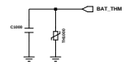

MOTOR

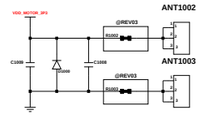

(3712-001626)

EARJACK

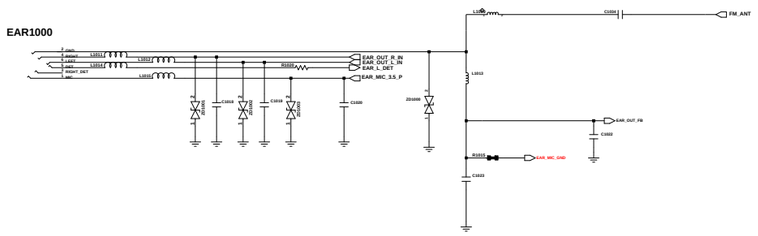

IF CONN

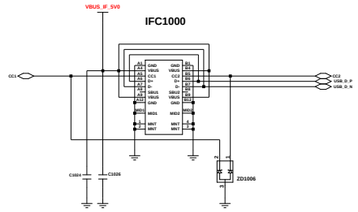

GRIP SENSOR2

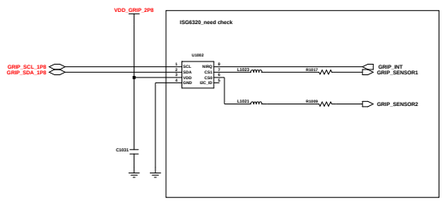

SPK

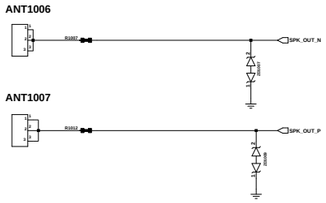

MIC

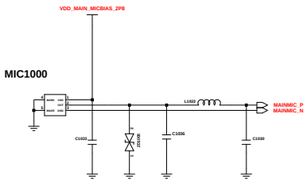

GLOBAL

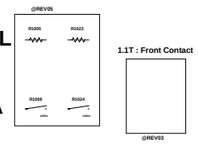

NA

1.1T : Front Contact

GASKET

3T : LCD SUS Contact

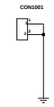

BOSS HOLE

INSIK MARK

Engineer:	
Drawn by:	
R&D CHK:	TITLE: SM-A236B_SUB_REV05
DOC CTRL CHK:	
MFG ENGR CHK:	
QA CHK:	REV: Drawing Number: Page:

Changed by: Date Changed: Time Changed:

SM-A236B/E/M/A2360
Common

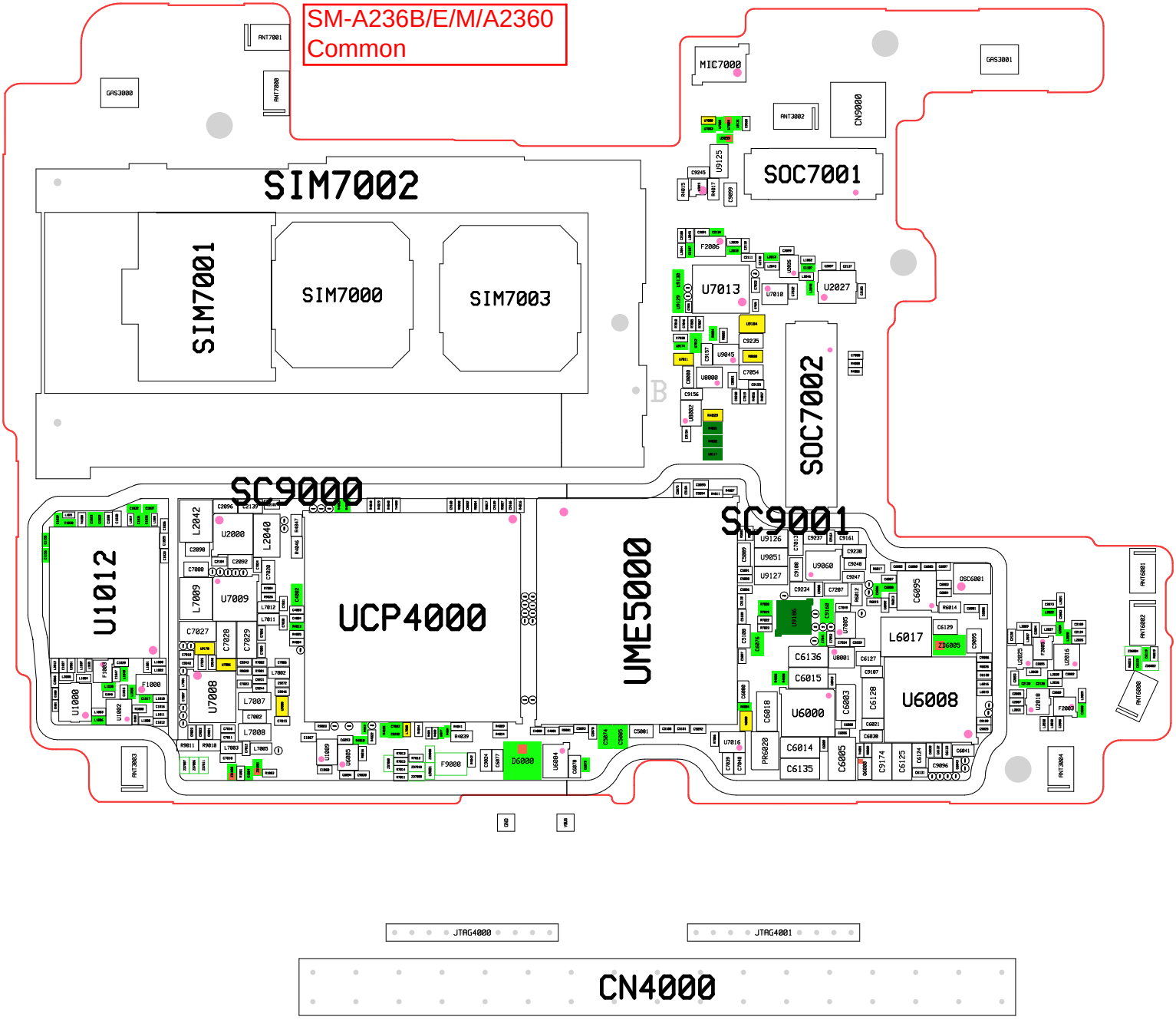

SM-A236B/E/M/A2360
Common

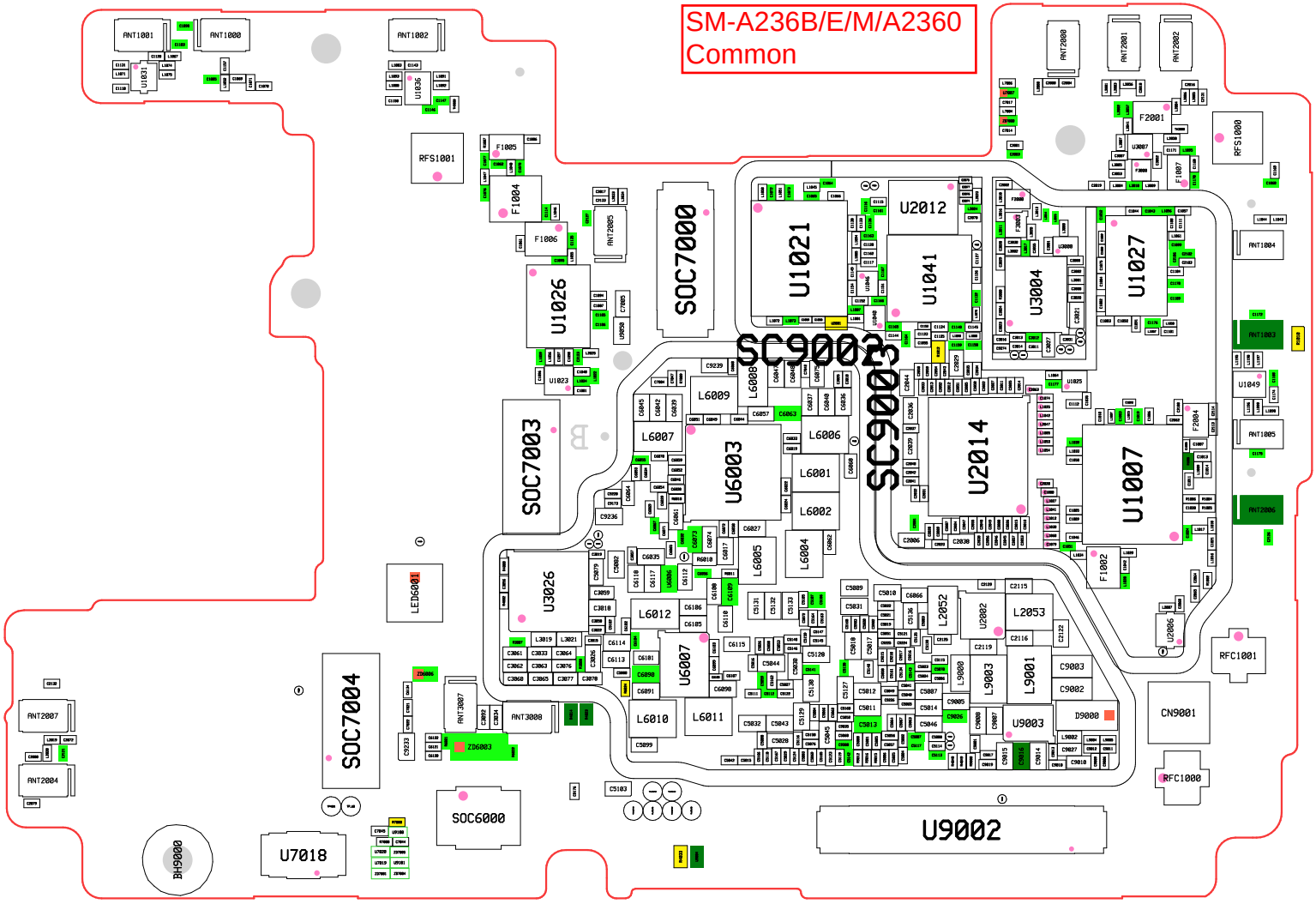

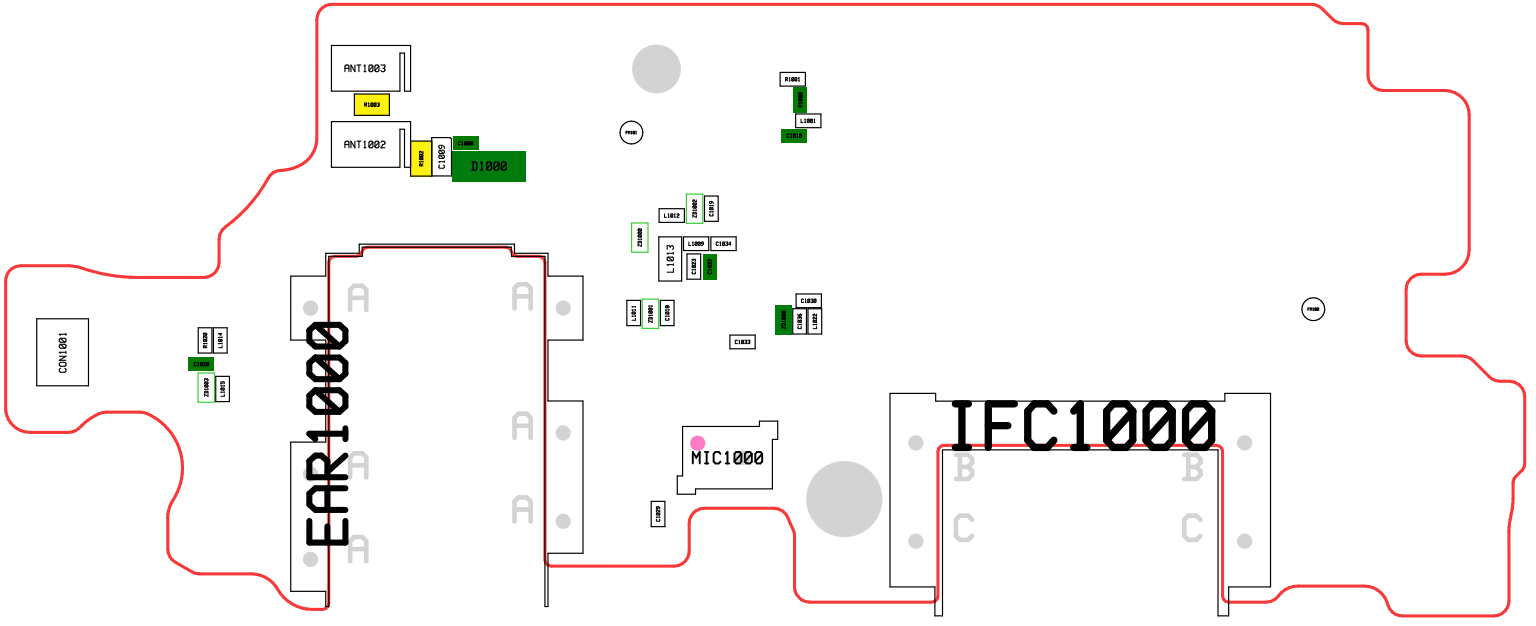
ANT1003
R1003
ANT1002
R1002
C1009
C1008
D1000
R1001
C1001
L1001
C1010
FRAME
L1012
ZD1002
C1007
ZD1000
L1013
L1009
C1034
C1033
C1011
L1011
ZD1001
C1005
C1030
C1031
C1036
L1032
C1032
CON1001
R1000
L1014
C1006
ZD1003
L1015
EAR1000
A
A
A
A
A
A
MIC1000
C1029
IFC1000
B
B
C
C
FRAME

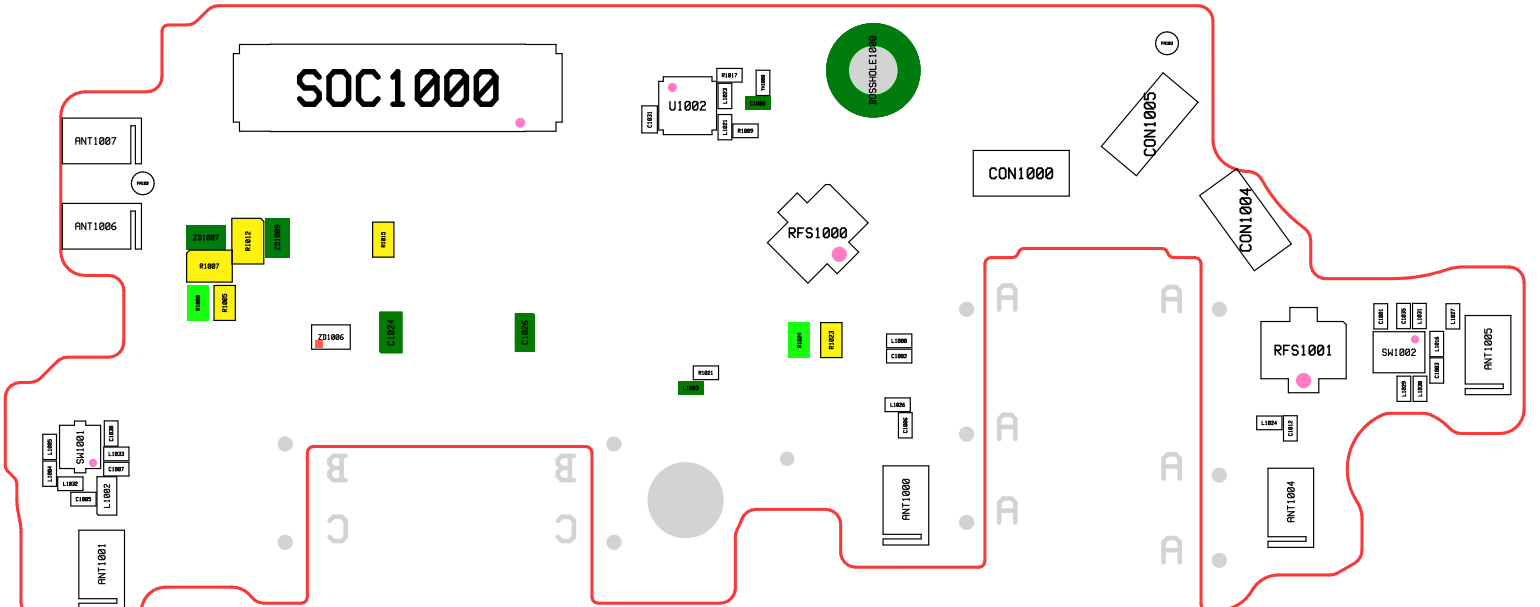
SOC1000
U1002
BOSSHOLE1000
CON1000
CON1005
CON1004
RFS1000
RFS1001
ANT1007
ANT1006
ANT1001
ANT1000
ANT1004
ANT1005
SW1001
SW1002
ZD1007
R1012
ZD1005
R1007
R1005
R1015
ZD1006
C1024
C1026
R1023
L1002